www.bonomini.com

"BONOMINI S.R.L." UNIPERSONALE
Via Ferri, 36 (Zona ind.)
25010 BORGOSATOLLO
BRESCIA - ITALY
Tel. +39 0302507011
Fax +39 0302507032

Cap. Soc. € 312.000,00 i.v.
C.F. 01601410986
P. IVA 03345220176
C.C.I.A.A. 329699
Trib. BS (Reg. Soc.) N. 45773

ITEM

2930SP34B0

SIF.U-PLUS Ø32/40 S/PIL.1"-1"¼

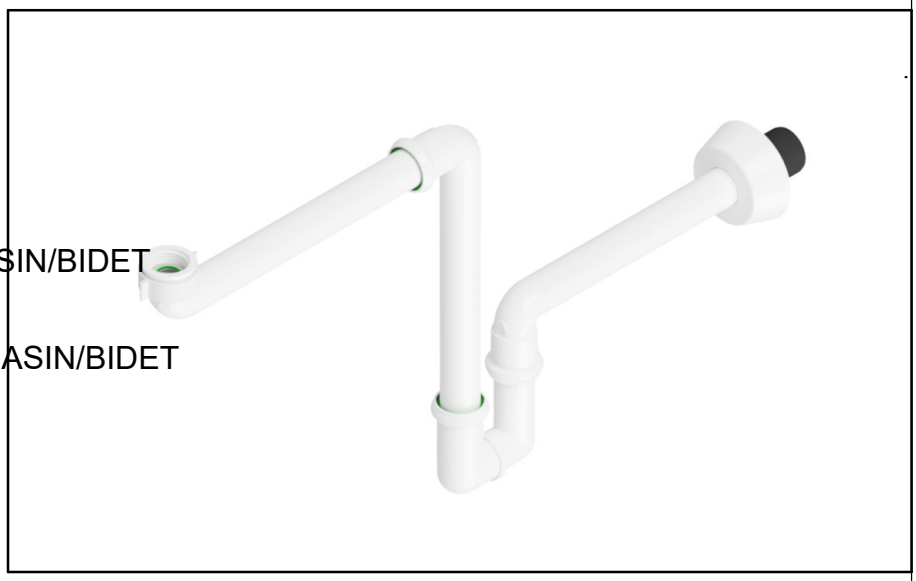

Product Type

TRAPS AND WASTES FOR WASHBASIN/BIDET

SPACE-SAVING TRAPS FOR WASHBASIN/BIDET

Logistic Info

Pcs per Carton: 10

Qty per Pallet:

Unit weight: 0,51100

Flow rate Lt/m.:

ORIGINE: MADE IN ITALY

Tarif Code :39229000

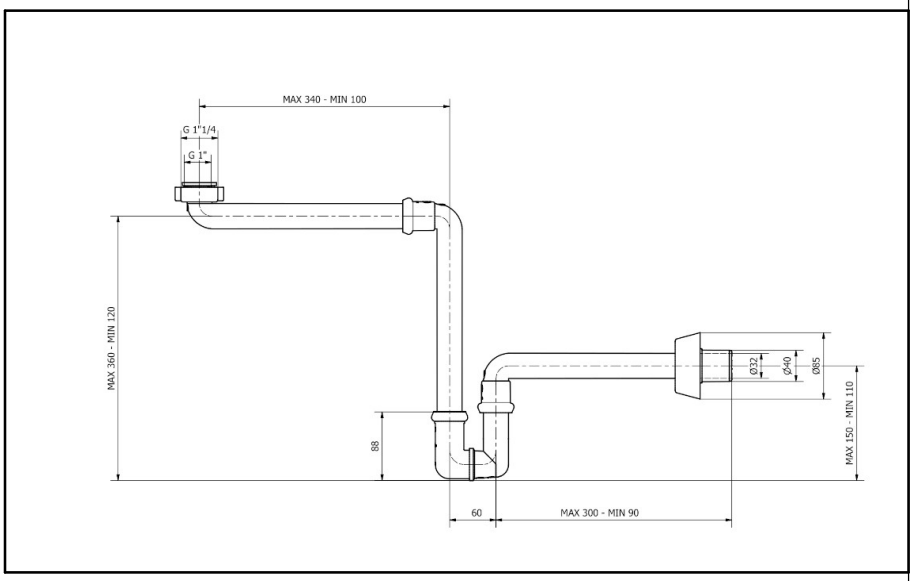

Tecnichal Details

Model: U-PLUS

Product: SPACE-SAVING SIPHONS FOR BATHROOM FURNITURE

Spec 1: UNIVERSAL THREAD CONNECTION, SILICON O-RING CONNECTIONS

Spec 2: 1" - 1"1/4 X ø 32/40 MM

Material 1: PP

Material 2: SYLICONE

Color 1: WHITE

Color 2: GREEN

Approvals